Panasonic®

Installation Guide

Included Installation Instructions | **For installation constructor only**

Network Camera

Model No. WV-X8570N / WV-S8530N

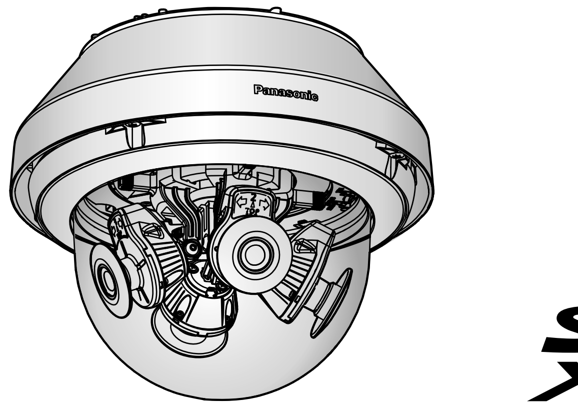

WV-X8570N

- Before attempting to connect or operate this product, please read these instructions carefully and save this manual for future use.
- For information about the basic description of this product, refer to the Important Information on the provided CD-ROM. For information about how to perform the settings and how to operate the camera, refer to the Operating Instructions on the following Panasonic support web site. **https://security.panasonic.com/download/**
- Before reading this manual, be sure to read the Important Information.
- The model number is abbreviated in some descriptions in this manual.

For U.S. and Canada:

Panasonic i-PRO Sensing Solutions
Corporation of America
800 Gessner Rd, Suite 700 Houston, TX 77024
https://www.security.us.panasonic.com/

Panasonic Canada Inc.
5770 Ambler Drive, Mississauga, Ontario, L4W 2T3 Canada
1-877-495-0580
https://www.panasonic.com/ca/

For Europe and other countries:

Panasonic Corporation
http://www.panasonic.com

Panasonic i-PRO Sensing Solutions Co., Ltd.
Fukuoka, Japan

Authorised Representative in EU:

Panasonic Testing Centre
Panasonic Marketing Europe GmbH
Winsbergring 15, 22525 Hamburg, Germany

© Panasonic i-PRO Sensing Solutions Co., Ltd. 2019

Ns0518-4109 PGQX2237VA Printed in China

Important safety instructions

1) Read these instructions.
2) Keep these instructions.
3) Heed all warnings.
4) Follow all instructions.
5) Do not block any ventilation openings. Install in accordance with the manufacturer's instructions.
6) Do not install near any heat sources such as radiators, heat registers, stoves, or other apparatus (including amplifiers) that produce heat.
7) Only use attachments/accessories specified by the manufacturer.
8) Use only with the cart, stand, tripod, bracket, or table specified by the manufacturer, or sold with the apparatus. When a cart is used, use caution when moving the cart/apparatus combination to avoid injury from tip-over.

9) Unplug this apparatus during lightning storms or when unused for long periods of time.
10) Refer all servicing to qualified service personnel. Servicing is required when the apparatus has been damaged in any way, such as power-supply cord or plug is damaged, liquid has been spilled or objects have fallen into the apparatus, the apparatus has been exposed to rain or moisture, does not operate normally, or has been dropped.

Troubleshooting

Before requesting service, refer to the Important Information (included in the CD-ROM) and "Troubleshooting" in the Operating Instructions on the Panasonic support web site and confirm the trouble.

Open Source Software

- This product contains open source software licensed under GPL (GNU General Public License), LGPL (GNU Lesser General Public License), etc.
- Customers can duplicate, distribute and modify the source code of the software under license of GPL and/or LGPL.
- Refer to the "readme.txt" file on the provided CD-ROM for further information about open source software licenses and the source code.
- Please note that Panasonic shall not respond to any inquiries regarding the contents of the source code.

WARNING:

- To prevent injury, this apparatus must be securely attached to the wall/ceiling in accordance with the installation instructions.
- All work related to the installation of this product should be made by qualified service personnel or system installers.
- The installation shall be carried out in accordance with all applicable installation rules.
- The connections should comply with local electrical code.
- Batteries (battery pack or batteries installed) shall not be exposed to excessive heat such as sunlight, fire or the like.

CAUTION:

- Any changes or modifications not expressly approved by the party responsible for compliance could void the user's authority to operate the equipment.
- The network camera is only intended for a connection to an ethernet or PoE network without routing to the outside plant.
- Alarm I/O cable / Audio input cable with ferrite core must be used for EMS (Electromagnetic Susceptibility).

For Canada

CAN ICES-3(A)/NMB-3(A)

⎓ **: Direct current symbol**

The model number and serial number of this product may be found on the surface of the unit. You should note the model number and serial number of this unit in the space provided and retain this book as a permanent record of your purchase to aid identification in the event of theft.

Model No. ____________________
Serial No. ____________________

For U.S.A.

NOTE: This equipment has been tested and found to comply with the limits for a Class A digital device, pursuant to Part 15 of the FCC Rules. These limits are designed to provide reasonable protection against harmful interference when the equipment is operated in a commercial environment. This equipment generates, uses, and can radiate radio frequency energy and, if not installed and used in accordance with the instruction manual, may cause harmful interference to radio communications.
Operation of this equipment in a residential area is likely to cause harmful interference in which case the user will be required to correct the interference at his own expense.

FCC Caution: To assure continued compliance, (example - use only shielded interface cables when connecting to computer or peripheral devices). Any changes or modifications not expressly approved by the party responsible for compliance could void the user's authority to operate this equipment.

Disposal of Old Equipment and Batteries
Only for European Union and countries with recycling systems

These symbols on the products, packaging, and/or accompanying documents mean that used electrical and electronic products and batteries must not be mixed with general household waste.
For proper treatment, recovery and recycling of old products and used batteries, please take them to applicable collection points in accordance with your national legislation.
By disposing of them correctly, you will help to save valuable resources and prevent any potential negative effects on human health and the environment.
For more information about collection and recycling, please contact your local municipality.
Penalties may be applicable for incorrect disposal of this waste, in accordance with national legislation.

Note for the battery symbol (bottom symbol)
This symbol might be used in combination with a chemical symbol. In this case it complies with the requirement set by the Directive for the chemical involved.

About notations

The following notations are used when describing the functions limited for specified models.
The functions without the notations are supported by all models.
(X8570) :The functions with this notation are available when using the model WV-X8570N.
(S8530) :The functions with this notation are available when using the model WV-S8530N.

About the user manuals

Product documentation is composed of the following documents.
Installation Guide (this document): Explains installation, mounting, cable connections, and adjusting the field of view. This manual uses the WV-X8570N as an example in the explanations.
Important Information (included in the CD-ROM): Provides basic information about the product such as Precautions for installation, Parts and functions, etc..
Operating Instructions (on the Panasonic support web site): Explains how to perform the settings and how to operate this camera.

Note:

- The external appearance and other parts shown in this manual may differ from the actual product within the scope that will not interfere with normal use due to improvement of the product.
- <Control No.:C****>" used in this document should be used to search for information on the Panasonic support website and will guide you to the right information.

Standard accessories

Installation Guide (this document)	1 set	CD-ROM[*2]	1 pc.
IMPORTANT SAFETY INSTRUCTIONS	1 pc.	Code label[*3]	1 pc.
Warranty card[*1]	1 set	ClearSight coating label[*4]	1 sheet

*1 This product comes with several types of warranties. Each warranty is only applicable to the products purchased in the regions indicated on the relevant warranty.
*2 The CD-ROM contains the operating instructions and different kinds of tool software programs.
*3 This label may be required for network management. Use caution not to lose this label.
*4 Attach the label carried by the camera to the surface of the production.

The following parts are used during installation procedures.

Base bracket	1 pc.	RJ45 waterproof connector cover	1 pc.
Attachment plate	1 pc.	RJ45 waterproof connector cap	1 pc.
Fixing screws for attachment plate (M4 × 8 mm {5/16 inches})	5 pcs. (of them, 1 for spare)	Bit (Hex wrench, screw size 6.35 mm {1/4 inches} T20)	1 pc.
Template A (for the attachment plate)	1 sheet	4P alarm cable (X8570)	1 pc.
Template B (for the base bracket)	1 sheet	Auxiliary handle (S8530)	1 pc.
Ferrite core (X8570)	1 pc.	Wire lug plate	1 pc.
Waterproof tape	1 pc.	Extended safety wire	1 pc.

Waterproof tape

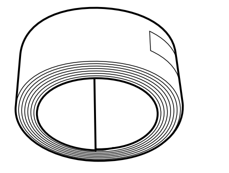

Bit

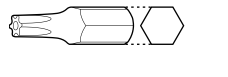

Auxiliary handle (S8530)

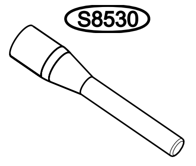

* The auxiliary handle is attached near camera 3 on the PAN table.

Preparations

Prepare the required parts for each installation method before starting the installation.

Installation method	Description of installation method
Mount the camera on the two-gang junction box using the attachment plate (accessory).	【Type 1】
Directly mount the camera onto the ceiling using the attachment plate (when wiring can be installed in the ceiling).	【Type 2】
Mount the camera onto the ceiling using the base bracket (accessory) (when conduits are used for wiring, or when there is no space available for wiring in the ceiling).	【Type 3】
Install by combining WV-Q187 (mount bracket) with WV-Q185 or WV-Q122A (wall mount bracket).	【Type 4】

IMPORTANT:

- Turn off each system's power supply (PoE hub, etc.) before starting the installation.

【Type 1】【Type 2】【Type 3】

- Procure 4 screws (M4) to secure the base bracket or the attachment plate to a ceiling.
- The minimum required pull-out capacity of a single screw or anchor bolt is 539 N {121 lbf} or more.
- Select screws according to the material of the location that the camera will be mounted to. In this case, wood screws and nails should not be used.
- If the mounting location such as plaster board is too weak to support the total weight, the area shall be sufficiently reinforced.

【Type 4】

- For further information about the fixing screw and the anchor bolt, refer to the manual of each bracket.

Preparation for cable connection (X8570)

When using the alarm I/O cable or the audio input cable, remove the cable case fixed by 4 screws at the upper side of the camera and pull out the alarm I/O cable and the audio input cable stored inside.

IMPORTANT:

- Alarm I/O cable / Audio input cable with the ferrite core (accessory) must be used for EMS (Electromagnetic Susceptibility). (Refer to the right illustration)

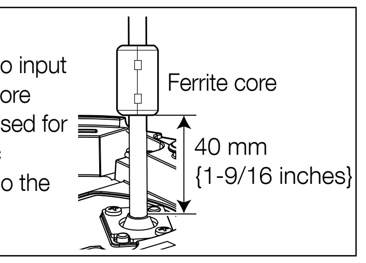

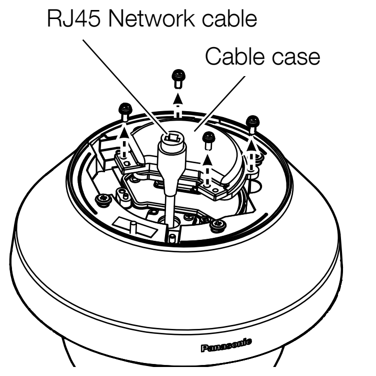

Remove the cap for the female thread for the conduit

When using the conduit on the ceiling for wiring, remove the cap for the female thread for the conduit by using a hexagon wrench (ISO 2936, width across flats S=5 mm {3/16 inches} · locally procured).

The female thread for conduit is compliant with ANSI NPSM (parallel pipe threads) 3/4 or ISO 228-1 (parallel pipe threads) G3/4.

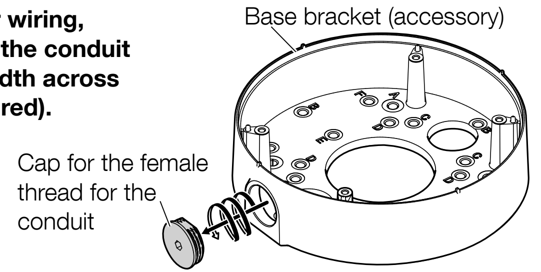

Installation

The installation tasks are explained using 5 steps.

- Remove the camera using the reverse order of the installation procedures.

Step1 Fixing the brackets ⇨ **Step2** Making connections ⇨ **Step3** Mount the camera ⇨ **Step4** Preparation for adjustment ⇨ **Step5** Adjustment ⇨ **Important Information (included in the CD-ROM)** Configure the network settings

Step 1 Fixing the brackets (Install the attachment bracket and the base bracket)

*There are 4 methods to install the camera to a ceiling or wall.

- Attach the attachment plate (accessory) so that the marking (PGYE1054) faces toward the ceiling to be installed.

【Type 1】Using a two-gang junction box.

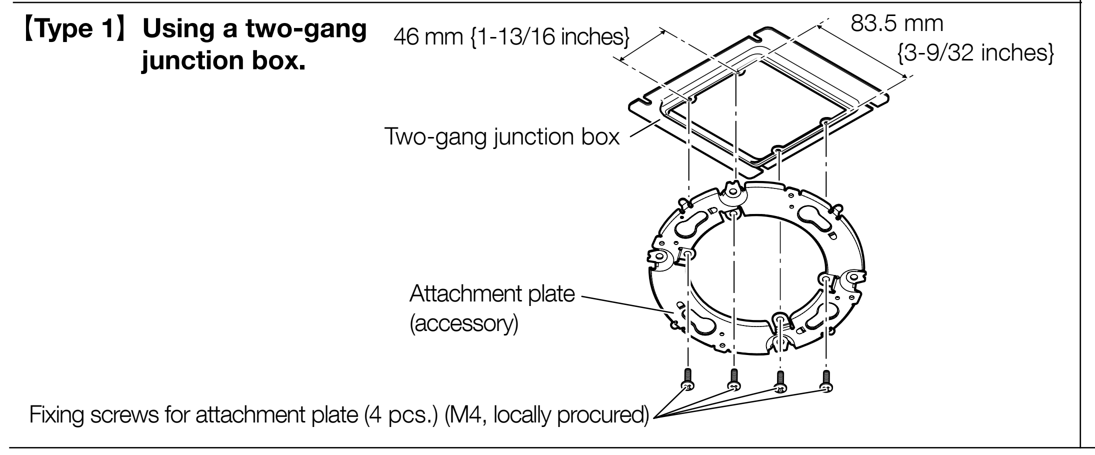

46 mm {1-13/16 inches}
83.5 mm {3-9/32 inches}
Two-gang junction box
Attachment plate (accessory)
Fixing screws for attachment plate (4 pcs.) (M4, locally procured)

【Type 2】Directly mount the camera to the ceiling using the attachment plate.

Align the "FRONT" direction of the template A (accessory) with the desired direction (direction of Panasonic logo on the camera when installing a camera), bore holes for screws or anchors on the ceiling, and holes for wiring (ø25.4 mm {ø1 inch}) as occasion demands. Then, fix the attachment plate.

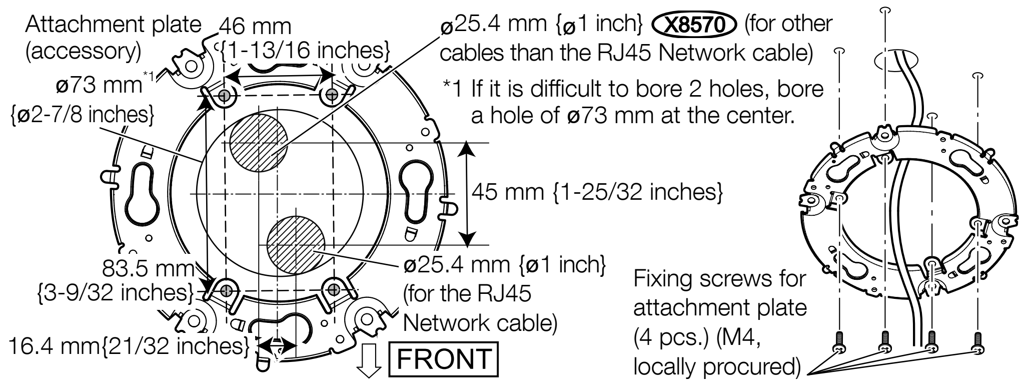

Attachment plate (accessory)
46 mm {1-13/16 inches}
ø73 mm[*1] {ø2-7/8 inches}
ø25.4 mm {ø1 inch} (X8570) (for other cables than the RJ45 Network cable)
45 mm {1-25/32 inches}
83.5 mm {3-9/32 inches}
ø25.4 mm {ø1 inch} (for the RJ45 Network cable)
16.4 mm{21/32 inches}
FRONT
Fixing screws for attachment plate (4 pcs.) (M4, locally procured)

*1 If it is difficult to bore 2 holes, bore a hole of ø73 mm at the center.

【Type 3】Mount the camera to a ceiling using base bracket (accessory).

①Using the template B (accessory), make screw holes for fixing the base bracket and wiring holes.

The base bracket can be fixed in any of the following 5 screwing positions according to ceiling and wall conditions. Match the hole used when installing the camera to any of positions A to D, F.

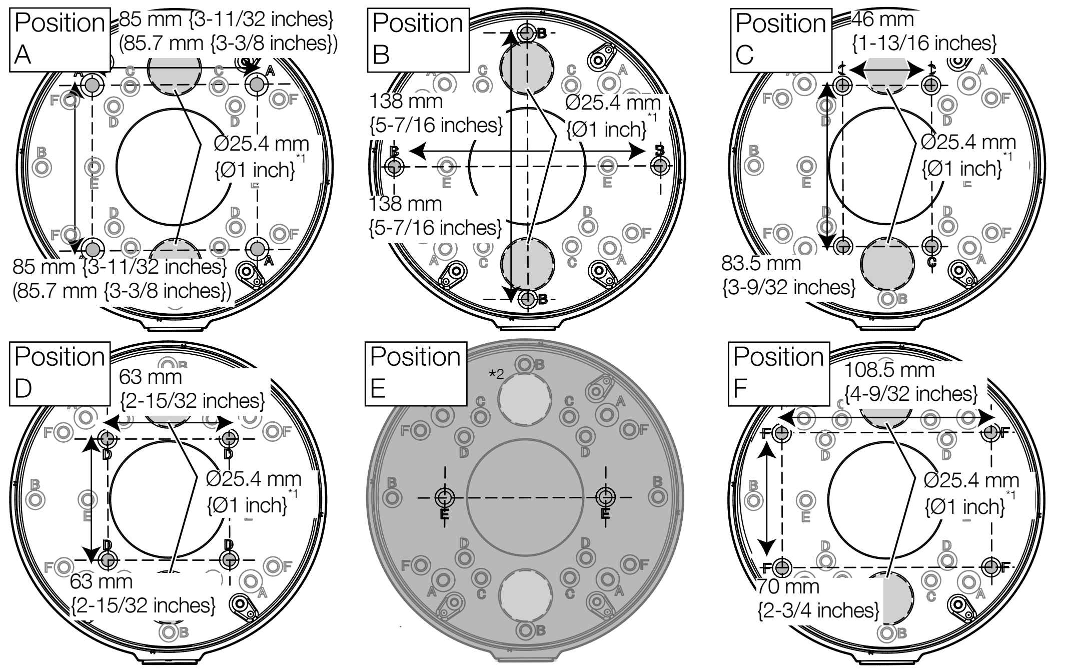

*1 Select any of the two wiring holes of template B (accessory) when installing the base bracket.
*2 When installing the camera, do not use Position E.

②Mount the attachment plate and the base bracket.

<When using the conduit on the ceiling for wiring> **<When drilling a hole through the ceiling for wiring>**

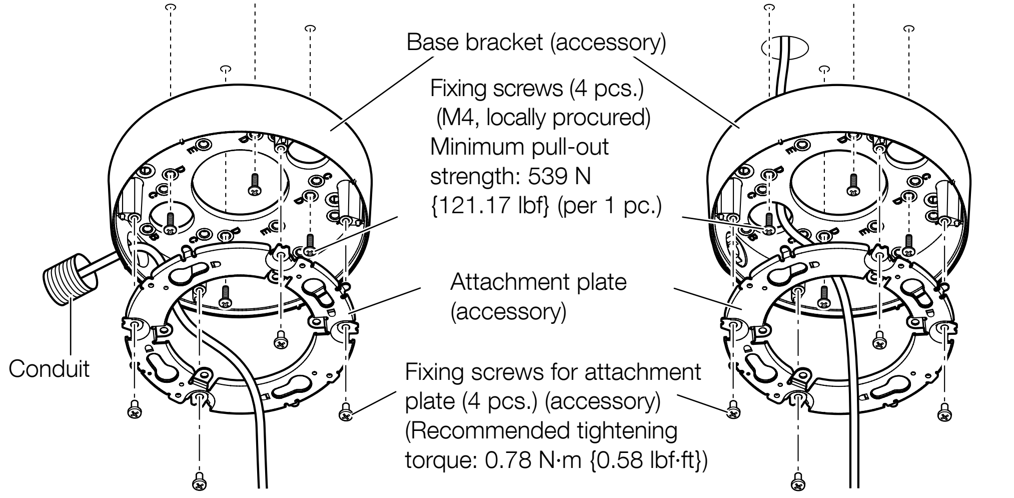

Base bracket (accessory)
Fixing screws (4 pcs.) (M4, locally procured) Minimum pull-out strength: 539 N {121.17 lbf} (per 1 pc.)
Attachment plate (accessory)
Conduit
Fixing screws for attachment plate (4 pcs.) (accessory) (Recommended tightening torque: 0.78 N·m {0.58 lbf·ft})

IMPORTANT:

- If open wiring is conducted, be sure to use conduits and run the cables inside the tubes to protect the cables from direct sunlight.
- Installation work shall be such that there is no exposure to water into the architecture through the conduits having been joined.

【Type 4】Install on a wall by combining WV-Q187 (optional mount bracket) with WV-Q185 or WV-Q122A (optional wall mount bracket).

①Install the attachment plate (accessory) onto WV-Q187 using the fixing screws for the attachment plate (4 pcs.) (accessory). (Recommended tightening torque: 0.78 N·m {0.58 lbf·ft})
②Fix at the installation place by combining each bracket.

* Refer to the manual of each bracket for how to attach the bracket.

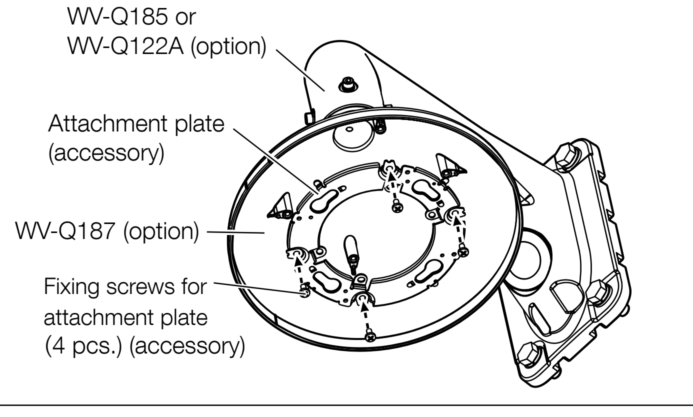

WV-Q185 or WV-Q122A (option)
Attachment plate (accessory)
WV-Q187 (option)
Fixing screws for attachment plate (4 pcs.) (accessory)

Step 1 Fixing the brackets (Attach the safety wire)

【1】 In the case of【Type 1】【Type 2】and【Type 3】, attach the wire lug plate (accessory) on the ceiling by following the instructions below. (In the case of【Type 4】, go to【2】.)

①Bore a hole near the position where the camera is to be installed to fix the wire lug plate.

* The illustration on the right shows the available range for fixing the wire lug plate for the camera installation.

②Fix the wire lug plate with an M6 bolt-nut or anchor (locally procured).
Minimum pull-out strength: 724 N {163 lbf}

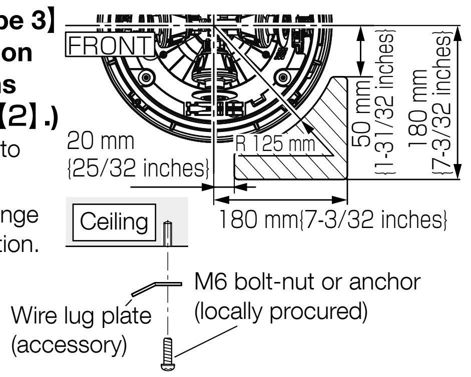
FRONT
50 mm {1-31/32 inches}
180 mm {7-3/32 inches}
20 mm {25/32 inches}
R 125 mm
180 mm{7-3/32 inches}
Ceiling
M6 bolt-nut or anchor (locally procured)
Wire lug plate (accessory)

【2】 Attach the safety wire to the wire lug plate.

<In the case of【Type 1】,【Type 2】and【Type 3】>

Attach the hook for the safety wire of the camera to the wire lug plate.

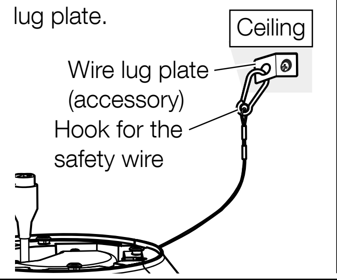
Ceiling
Wire lug plate (accessory)
Hook for the safety wire

<In the case of【Type 4】>

Attach the hook for the safety wire of the camera to the wire hook section of WV-Q185 or WV-Q122A (option).

Note:

- When the safety wire is not long enough to reach the hook, use the extended safety wire (accessory).

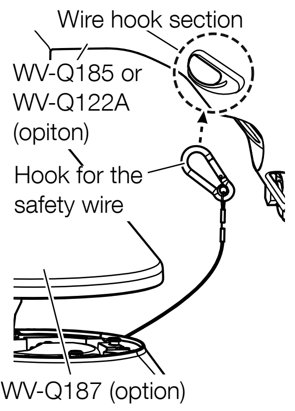
Wire hook section
WV-Q185 or WV-Q122A (opiton)
Hook for the safety wire
WV-Q187 (option)

Step 2 Making connections

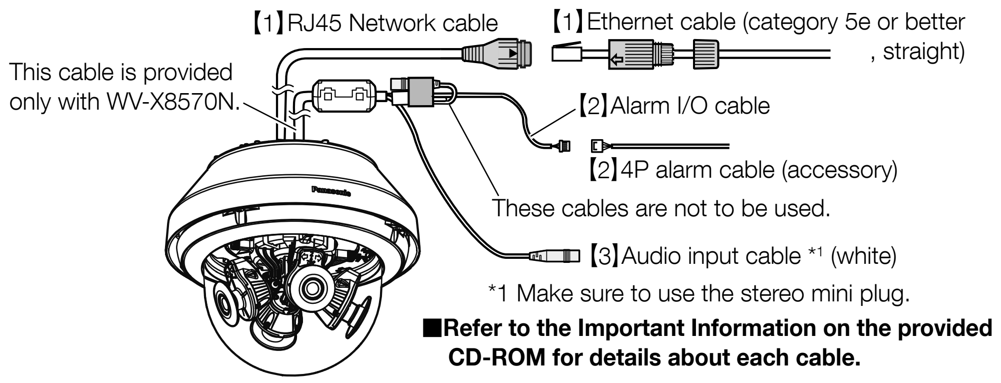
【1】RJ45 Network cable
【1】Ethernet cable (category 5e or better , straight)
This cable is provided only with WV-X8570N.
【2】Alarm I/O cable
【2】4P alarm cable (accessory)
These cables are not to be used.
【3】Audio input cable *1 (white)

*1 Make sure to use the stereo mini plug.

■Refer to the Important Information on the provided CD-ROM for details about each cable.

【1】 Connect an Ethernet cable (category 5e or better, straight) to RJ45 network cable. * The maximum cable length is 100 m {328 feet}.

IMPORTANT:

- If the procedure for the RJ45 waterproof connector (accessory) part is not correctly followed, the waterproofing may be compromised. Do not install the camera where the RJ45 waterproof connector is exposed to constant rain or moisture.
- The external dimensions of the Ethernet cable are from ø5 mm {ø3/16 inches} to ø6.5 mm {ø1/4 inches}.

①First pass the Ethernet cable through the RJ45 waterproof connector cap (accessory) and then through the RJ45 waterproof connector cover (accessory). Next, use a specialized tool (locally procured) to crimp the RJ45 plug (locally procured) to the end of the Ethernet cable.
- Take care not to remove the rubber parts from inside the RJ45 waterproof connector cover.

②Insert the RJ45 plug into the RJ45 waterproof jack connected to the camera.

③Connect the RJ45 waterproof connector cover to the RJ45 waterproof jack and then rotate the RJ45 waterproof connector cover until the "⇦" marks align.

④Connect the RJ45 waterproof connector cap to the RJ45 waterproof connector cover and rotate the RJ45 waterproof connector cap until there is no gap between it and the RJ45 waterproof connector cover.

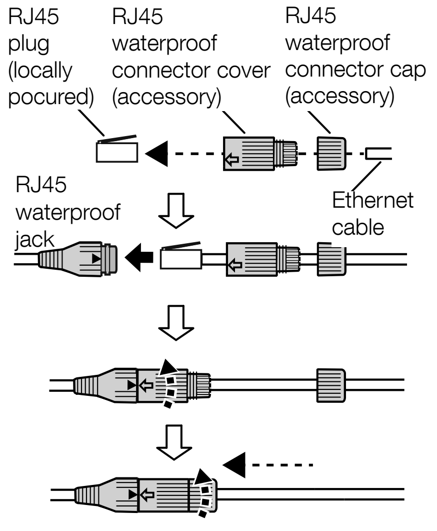
RJ45 plug (locally pocured)
RJ45 waterproof connector cover (accessory)
RJ45 waterproof connector cap (accessory)
RJ45 waterproof jack
Ethernet cable

IMPORTANT:

- When removing the RJ45 waterproof connector, be sure to loosen the RJ45 waterproof connector cap first, rotate the RJ45 waterproof connector cover in the direction opposite to the attaching direction, and remove it. (If the RJ45 waterproof connector cover is removed when the "⇦" mark of the RJ45 waterproof connector cover is aligned with the "▶" mark of the RJ45 waterproof jack, the RJ45 waterproof jack may be damaged)

【2】 If needed, connect the 4P alarm cable (accessory). (X8570)

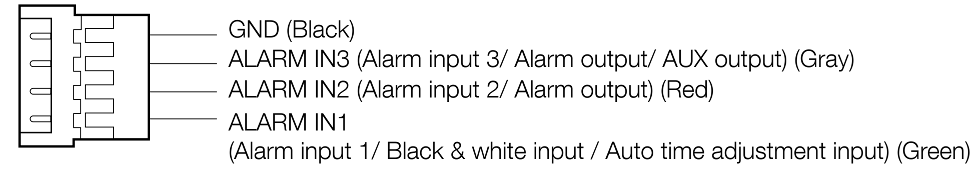
4P alarm cable (accessory)
GND (Black)
ALARM IN3 (Alarm input 3/ Alarm output/ AUX output) (Gray)
ALARM IN2 (Alarm input 2/ Alarm output) (Red)
ALARM IN1
(Alarm input 1/ Black & white input / Auto time adjustment input) (Green)

Note:

- The default of external I/O terminals is "Off". Refer to the Operating Instructions on the provided CD-ROM for further information about the external I/O terminal settings.

【3】 If needed, connect a microphone or the line out of an external device to the audio input cable. (X8570)

【4】 Adequate waterproof treatment is required for the cables when installing the camera with cables exposed. (X8570)

The camera body is waterproof, but the cable ends, inside the base bracket (accessory) are not waterproof. Apply waterproof treatment on the connecting part as shown below.

<Waterproof treatment for other cables than the Ethernet cable>

Apply some waterproof tape (accessory) as shown in the right.

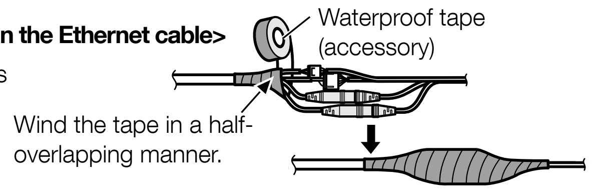
Waterproof tape (accessory)
Wind the tape in a half-overlapping manner.

IMPORTANT:

- Stretch the tape by approx. twice (see the illustration) and wind it around the cable. Insufficient tape stretch causes insufficient waterproofing.

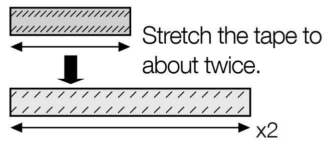
Stretch the tape to about twice.
x2

Step 3 Mount the camera

【1】 Align the 4 attachment mounting screws at the bottom of the camera with the holes in the attachment plate (accessory), and mount the camera.

Align the center of the Panasonic logo on the camera with the "|" mark on the left side of the WV-Q187 (option) and insert the camera. Then, temporary fix the camera by rotating it around 15° to the "|" mark on the right.

When directly attaching the attachment plate, align the OPEN mark with the nail of the attachment plate and insert. When attaching using the base bracket (accessory), align the protruding part of the base bracket with the OPEN mark and insert it and then temporary fix it by rotating it around 15° to the LOCK mark.

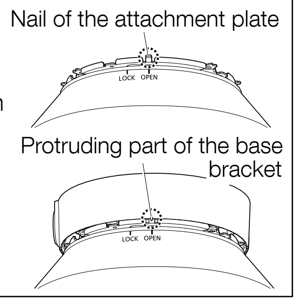
Nail of the attachment plate
LOCK OPEN
Protruding part of the base bracket
LOCK OPEN

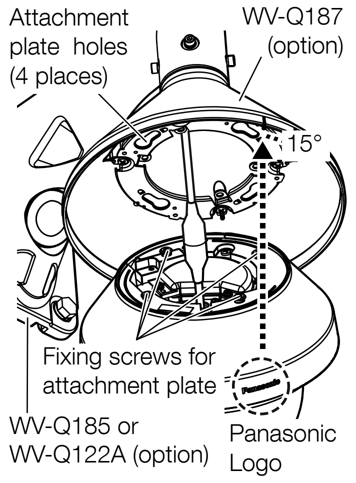
Attachment plate holes (4 places)
WV-Q187 (option)
15°
Fixing screws for attachment plate
WV-Q185 or WV-Q122A (option)
Panasonic Logo

【2】 Loosen 4 dome cover fixing screws using the bit (accessory), and remove the dome cover from the camera.

IMPORTANT:

- Dome cover is fixed to the camera body by the installed auxiliary wire, so please do not remove it.
- The dome cover is not fixed temporarily. Take care not to hit the dome cover against periphery

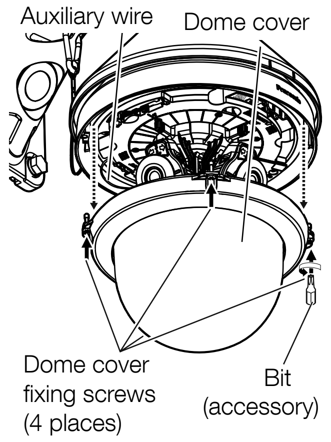
Auxiliary wire
Dome cover
Dome cover fixing screws (4 places)
Bit (accessory)

【3】 Remove the protective packagings (2 pcs.) from the camera units.

【4】 Shift camera 2 to the arrow direction by 2 scales (30°) shown on the illustration on the right by referring to <How to adjust the horizontal (PAN) angle> on the right side of STEP 5 in this document.

【5】 Put camera 2 back to the original position after fixing the camera using the camera fixing screw.

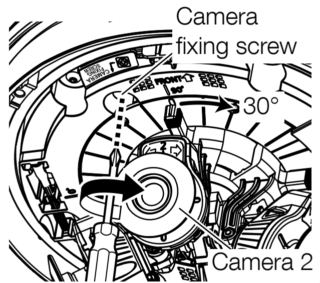
Camera fixing screw
30°
Camera 2

IMPORTANT:

- Be sure to tighten the camera fixing screw. Failure to observe this may cause camera trouble due to camera falling. (Recommended tightening torque: 0.78 N·m {0.58 lbf·ft})

Step 4 Preparation for adjustment

【1】 Insert an SD memory card into the SD slot, if necessary.

- Refer to the "Important Information" on the provided CD-ROM for how to insert/remove the SD memory card.

【2】 Confirm the position of the camera 4 and remove the direction sheet.

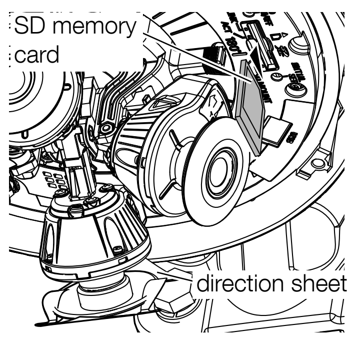
SD memory card
direction sheet

【3】 Insert the Wi-Fi USB adapter (locally procured) to the USB port (for installation constructor) and then turn on the power of the camera. (The Wi-Fi USB adapter is used only at the time of the installation/servicing.)

* When not using the Wi-Fi USB adapter (when adjusting using a PC directly connected with an Ethernet cable), connect the camera to the network by referring to "Configure the network settings" of the Important Information (on the provided CD-ROM).
Display the "Easy Installation" tab of "Easy Setup" from the menu of the camera and then go to "Step 5 Adjustment".

Be sure to use a Wi-Fi USB adapter that is checked its operability by Panasonic. Refer to the Panasonic support website below for operation check information of Wi-Fi USB adapter.

https://security.panasonic.com/support/info/ <Control No.: C0114>

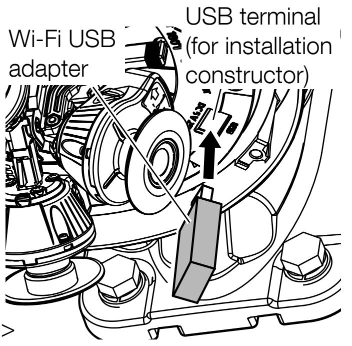
Wi-Fi USB adapter
USB terminal (for installation constructor)

【4】 Select "Wi-Fi" from the setting of a tablet or smart phone and then connect with the Wi-Fi USB adapter (to be locally procured) attached to the camera.

Refer to the manual of the Wi-Fi- USB adapter and device in use for how to connect them.

SSID : "Product No._Serial No. of the camera"
Password : "cam_" + "Serial No. of the camera"

【5】 Launch the browser on a tablet or smart phone and then enter the following URL to connect with the camera main unit. http://192.168.12.10

* If access to http://192.168.12.10 fails, try http://10.0.0.10.

【6】 The initial screen of the camera will be displayed on the tablet's or smart phone's browser.

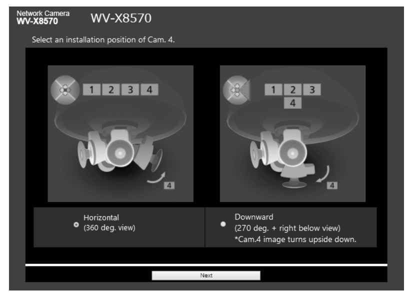
Network Camera WV-X8570 WV-X8570

Select an installation position of Cam. 4.

1 2 3 4
1 2 3
4

○ Horizontal (360 deg. view)

● Downward (270 deg. + right below view) *Cam.4 image turns upside down.

Next

Initial screen

Step 5 Adjustment

***For details of adjustment and case examples, refer to the Panasonic support website (https://security.panasonic.com/support/info/ <Control No.: C0115>).**

* As an example, the explanation is provided using a Wi-Fi USB adapter.When adjusting using a directly connected PC. refer to "Easy Installation" of the operating Instructions (on the Panasonic support web site).

【1】 Select an installation condition of the camera.

① Select a layout for capturing images according to the installation place of the camera.
Select one of "360 deg. view" (installing the cameras 1-4 horizontally) or "270 deg. + right below view" (installing the camera 4 facing downward) in the displayed initial screen. When [Next] is clicked after the selection, the following screen will be displayed according to the selected content.

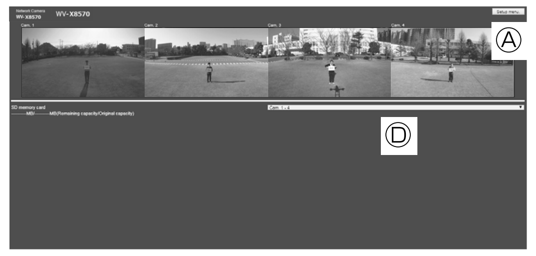

When selecting "360 deg. view"

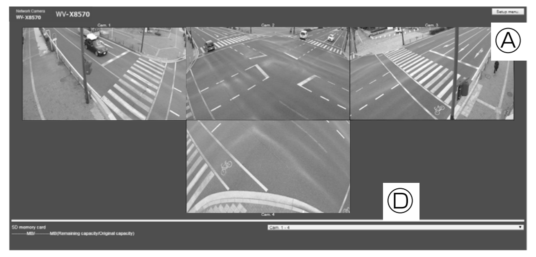

When selecting "270 deg. + right below view"

- The setup menu will be displayed when the [Setup menu] button Ⓐ on the top right of the screen is clicked. Use of the pull-down menu Ⓑ on the top of the setup menu can switch selection between "360 deg." and "270 deg. + right below". To close the setup menu, click the [Close] button Ⓒ on the bottom of the setup menu.

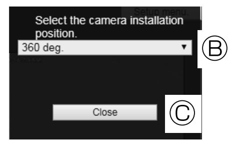
Select the camera installation position.

360 deg.
Close
Ⓑ
Ⓒ

Setup menu

- Use of the pull-down menu Ⓓ on the bottom center of the screen can switch the camera to display images.(Cam. 1-4/ Cam. 1/ Cam. 2/ Cam. 3/ Cam. 4)

【2】 Adjust the angle of the camera.

① When "270 deg. + right below view" (camera 4 is installed with the shooting direction downward) is selected, turn the direction of camera 4 vertically downward by referring to **<How to adjust the vertical (TILT) angle>** on the right side of this document.

② Referring to **<How to adjust the horizontal (PAN) angle>** on the right side of this document, adjust the horizontal (PAN) angle of camera 2 so that the camera 2 faces the center of the screen to be shot.

③ Adjust the horizontal (PAN) angle of cameras 1, 3 and 4 to eliminate dead angle in the shooting range.

④ If necessary, adjust the TILT (vertical) angle and the YAW (inclination) angle of each camera by referring to the adjustment method shown on the right.

⑤ If necessary, repeat steps ② to ④ to adjust the direction of each camera.

Note:

- To display or hide the auxiliary line on the screen, select 1-screen display and click the [Cross line display] button Ⓕ referring to【3】-① described below. The auxiliary line helps to check the horizontality and verticality of the displayed image.
- When selecting "270 deg. + right below view", in order to eliminate dead angle in the shooting range, set the vertical (TILT) angle of the camera 1, 2, and 3 between +30° and +65°, and the vertical (TILT) angle of the camera 4 as close as possible to that of the camera 2 (in the minus direction).

【3】 Adjust the zoom and focus. (S8530)

*Depending on the YAW (inclination) angle, adjustment using the auxiliary handle may be difficult. In such a case, adjust zoom and focus first, then adjust the YAW (inclination) angle again.

*To eliminate dead angle in the shooting range, set the zoom to the WIDE end (x1).

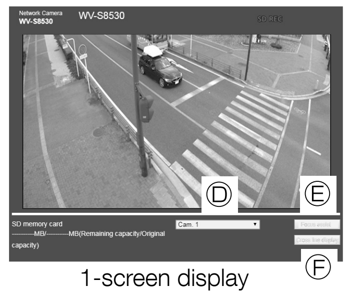
Network Camera WV-S8530
WV-S8530
Ⓓ
Ⓔ
Ⓕ

1-screen display

①Click and select a camera to be adjusted from the screens of cameras 1-4 that are displayed on "360 deg. view" or "270 deg. + right below view" to display the screen on 1-screen. (To return to 4-screen, use the pull-down menu Ⓓ on the bottom center of the screen.)

②When the handle part of the auxiliary handle is pushed by a finger, the knob side of the auxiliary handle will rise up. Remove the auxiliary handle by pulling it out to the arrow direction as shown on the illustration on the right and then attach it to the zoom lock knob.

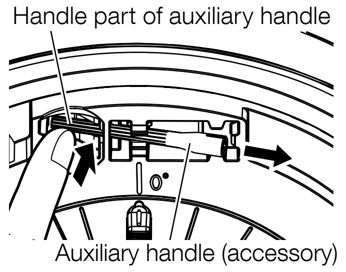
Handle part of auxiliary handle
0°
Auxiliary handle (accessory)

③Loosen the zoom lock knob to which the auxiliary handle is attached by rotating counterclockwise, and move the handle between TELE and WIDE to acquire an appropriate angle of view. Then, tighten the zoom lock knob by rotating clockwise.

④Remove the auxiliary handle from the zoom lock knob and then attach it to the focus lock knob provided at the back of the knob mark.

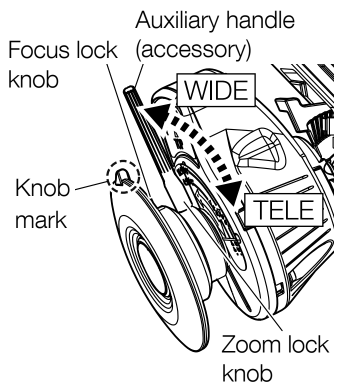
Auxiliary handle (accessory)
Focus lock knob
WIDE
Knob mark
TELE
Zoom lock knob

⑤Display the "FOCUS ADJUSTMENT" screen (see the illustration on the right) by clicking the [Focus assist] button Ⓔ displayed on the bottom right of the screen.

⑥Loosen the focus lock knob to which the auxiliary handle is attached by rotating counterclockwise, and move the handle in front and behind of the focused position. The optimal focus position will be automatically recorded as the "PEAK HOLD" position.

⑦When the Focus lock knob is moved, the current focus position will be indicated on "INDICATOR". Adjust the focus position so that the indicator value goes close to the "PEAK HOLD" position.

⑧When the indicator value goes to the best focus position, "BEST FOCUS" will be displayed in reverse at the lower right corner of the screen.

⑨Tighten the focus lock knob so as to fix the best focus position.

⑩If necessary, repeat steps ③ to ⑨ to adjust and determine the angle of view and the focus.

⑪Exit the "FOCUS ADJUSTMENT" screen by clicking the [Focus assist] button Ⓔ.

⑫When the adjustment is completed, remove the auxiliary handle and return it to the camera main body.To store the auxiliary handle to the original position, execute step ② above in the reverse order.

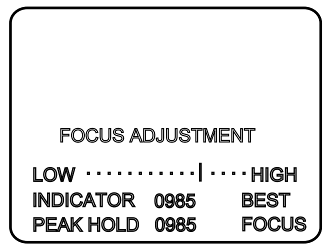
```
FOCUS ADJUSTMENT

LOW ···········|···· HIGH
INDICATOR  0985      BEST
PEAK HOLD  0985      FOCUS
```

"FOCUS ADJUSTMENT" screen

【4】 Remove the Wi-Fi USB adapter. (In the case of using a Wi-Fi USB adapter)

IMPORTANT:

- Be sure to remove the Wi-Fi USB adapter.

* This illustration represents WV-S8530N

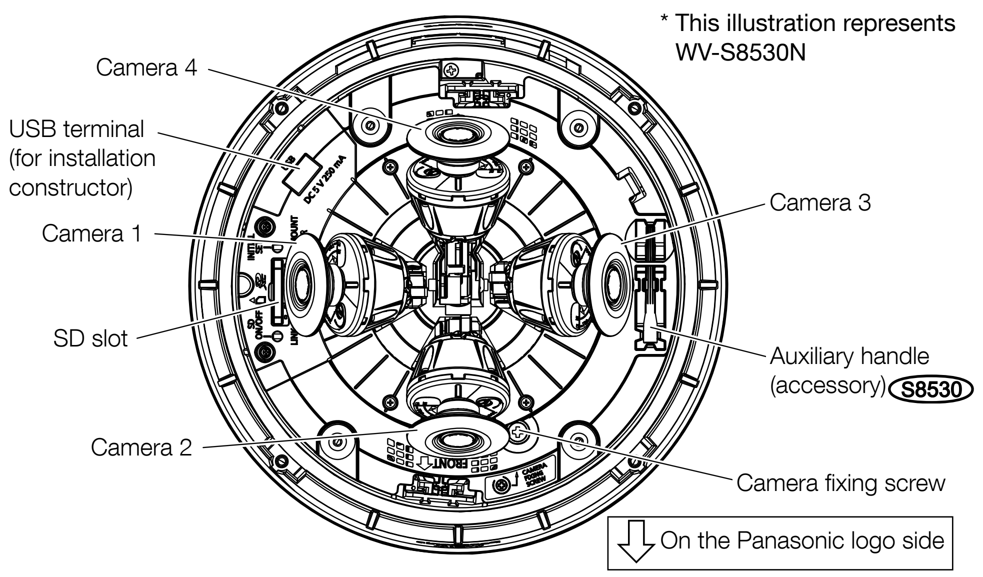
Camera 4
USB terminal (for installation constructor)
Camera 1
SD slot
Camera 2
Camera 3
Auxiliary handle (accessory) S8530
Camera fixing screw
On the Panasonic logo side

The following explanation is an example of how to adjust camera 2. The adjustment angle described below is when all the cameras are in their factory-set positions. The adjustable angle of each camera varies according to the positional relationship with other cameras.
- Be careful not to touch the lens part of the camera during the adjustment.
- Depending on the adjusted position of each camera unit, the Wi-Fi USB adapter may be seen in the screen.

<How to adjust the horizontal (PAN) angle>

Hold and move the PAN adjustment knob to change the direction of each camera unit.

Camera 1-4 : ±30 ° (when each camera is in the factory-set position)
Notch interval : 2.5 °

Note:

- 360 ° horizontal (PAN) movement of each camera is available by moving each camera unit in order.

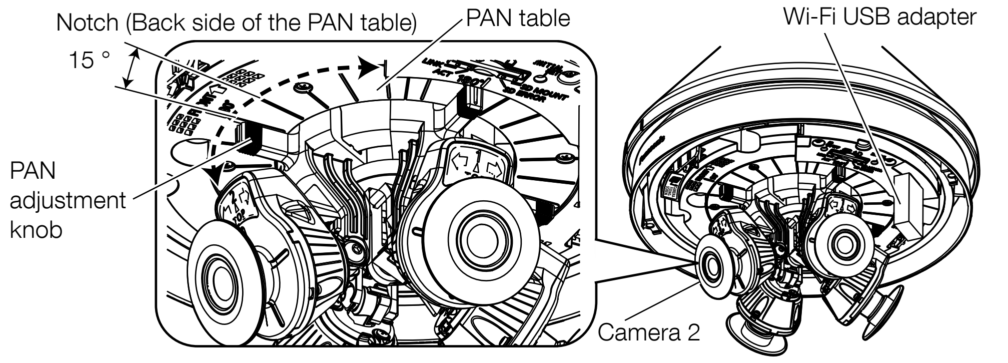
Notch (Back side of the PAN table)
PAN table
Wi-Fi USB adapter
15 °
PAN adjustment knob
Camera 2

<How to adjust the vertical (TILT) angle>

Hold and move the camera unit to change the direction of each camera unit.

Camera 1-3 : +30 ° to +80 ° / Camera 4 : -15 ° to +80 °
Notch interval : 5 °

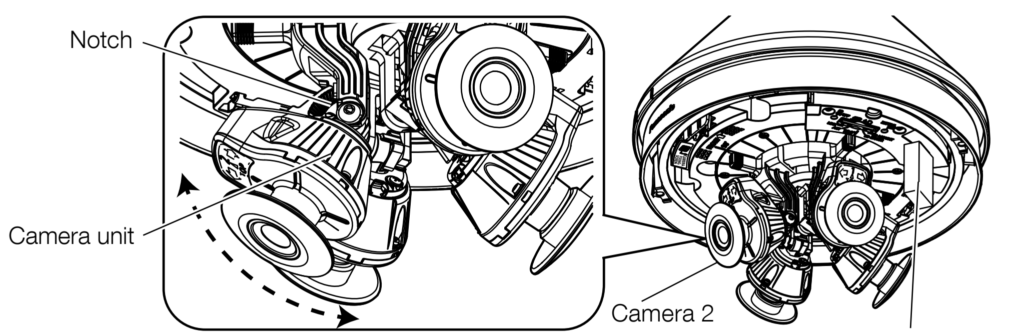
Notch
Camera unit
Camera 2
Wi-Fi USB adapter

<How to adjust the inclination (YAW) angle>

Hold and move the camera unit to change the direction of each camera unit.

Camera 1-3 : ±50 °
Notch interval : 5 °

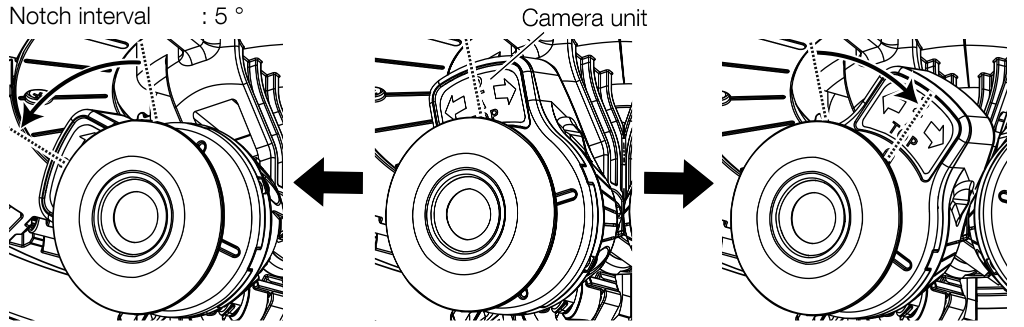
Camera unit

【5】 Attach the dome cover and fix it by tighten the dome cover fixing screws (4 points) using the bit (accessory).

IMPORTANT:

- Be sure to tighten the dome cover screws in diagonal pattern.
  Recommended tightening torque:
  1.37 N·m {1.01 lbf·ft}
- Attach the dome cover straight to the camera main unit. When it is attached inclined, the inside of the dome cover may contact the camera unit and cause deviation of the set angle of view.

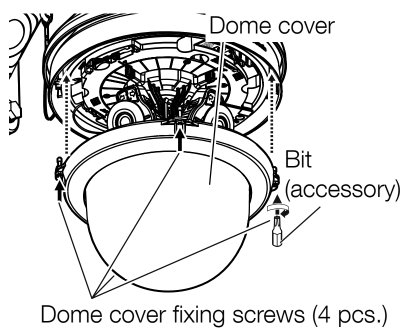
Dome cover
Bit (accessory)
Dome cover fixing screws (4 pcs.)

【6】 Remove the protection sheet from the dome cover.

【7】 Connect the camera to a network by following "Configure the network settings" of the Important Information (on the provided CD-ROM).